▷ NOTES

1. DESIGNED AND TESTED IN ACCORDANCE WITH WIND LOAD PROVISIONS OF THE FLORIDA BUILDING CODE AND INTERNATIONAL BUILDING CODE. PROFESSIONAL ENGINEER'S SEAL PROVIDED ONLY FOR VERIFICATION OF WIND LOAD CONSTRUCTION DETAILS.
2. PRESSURES LISTED AS POSITIVE/NEGATIVE (DESIGN).
3. SECTION HEIGHTS MAY VARY TO CREATE VARIOUS DOOR HEIGHTS, 26" MAXIMUM SECTION HEIGHT.
4. LIFT CLEARANCE OR FULL VERTICAL TRACK MAY ALSO BE USED. LOW HEADROOOM TRACK MAY BE USED WITH EITHER DRAWBAR OPERATOR OR LOCK.
5. FASTENING METHODS (TRACK TO WALL), SPACING BASED ON BRACKET SPACING (SEE CHART BELOW):
   A. JAMB BRACKETS (TYP WOOD JAMBS) STYLE TRACK-- 5/16" x 1 3/4" LAG BOLT, OR EQUIVALENT.
   B. ALTERNATE ANGLE MOUNT-SEE SHEET 2
6. CHOICES OF MATERIAL AVAILABLE FOR GLAZING ARE DSB GLASS, TEMPERED GLASS, LAMINATED GLASS, OR LEXAN. AVAILABLE THICKNESS ARE 1/8", 1/4", 3/8", AND 1/2". A .050 ALUMINUM PANEL CAN BE SUBSTITUTED FOR GLASS IN ANY SECTION. MAX GLAZING WIDTH IS 46".
7. STRUT OR ANGLE INSTALLATION:
   A. FOR STRUTS ONLY- USE 2 SCREWS (P/N 605879-0001) AT BOTH ENDS OF STRUT (P/N 400650-XXXX), 2 ON EACH CENTER HINGE LOCATION, AND 1 BETWEEN EACH HINGE.
   B. FOR ANGLES (P/N 082033-XXXX) ONLY--
   - USE 3 SCREWS AT EACH END, 2 AT EACH CENTER STILE LOCATION, 1 SCREW BETWEEN EVERY CENTER HINGE.
8. WHEN ONE ANGLE IS USED, THE ANGLE LEG IS TURNED DOWN. WHEN TWO ANGLES ARE USED, ONE ANGLE LEG IS TURNED UP AND THE OTHER ANGLE LEG IS TURNED DOWN.
9. REFERENCE WINDLOAD SPECIFICATION CHART FOR END STILE REQUIREMENTS (SEE DETAIL F).
   - FOR DOUBLE END STILE, A = 6.70"
10. FOR COMMERCIAL HARDWARE DETAILS SEE DRAWING 408717.
11. 2" 20GA STEEL STRUTS (412619-XXXX2) MAY BE SUBSTITUTED FOR HS-1 (400650-0001).
12. 3" 20GA STEEL STRUTS (411186-XXX2) MAY BE SUBSTITUTED FOR HS-2 STRUTS (400650-0002).

REVISIONS

EN	REV	DESCRIPTION	DATE	APPROV
32177	E	REVISED PER PCR	10/21/19	JQ
32499	F	DRAWING UPDATES	10/2/20	TC
32933	G	ADDED 2"&3" 20GA STRUTS	05/05/25	M.DAU

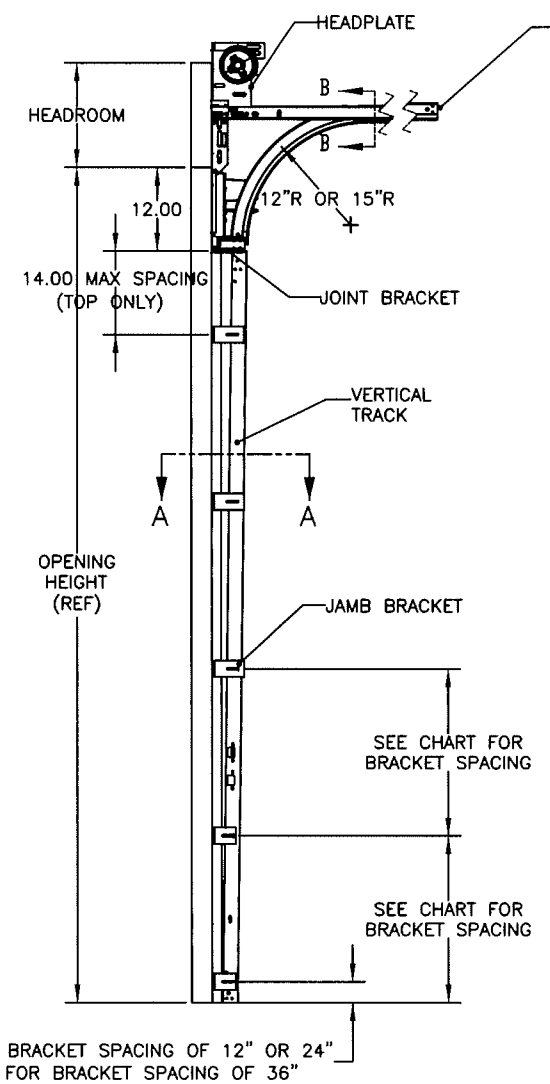

SIDE ELEVATION OF TYPICAL COMMERCIAL TRACK

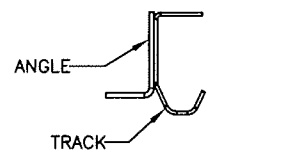

SECTION B-B
HORIZONTAL TRACK

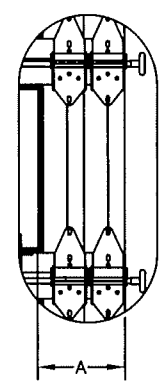

10 DETAIL F

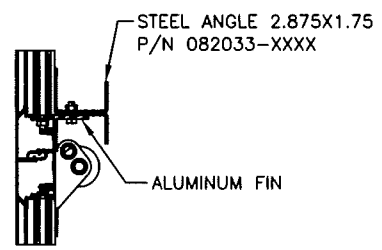

9 SECTION E-E

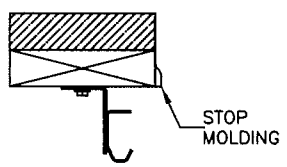

5A SECTION A-A
JAMB BRACKET MOUNT
(TYP. WOOD JAMBS)

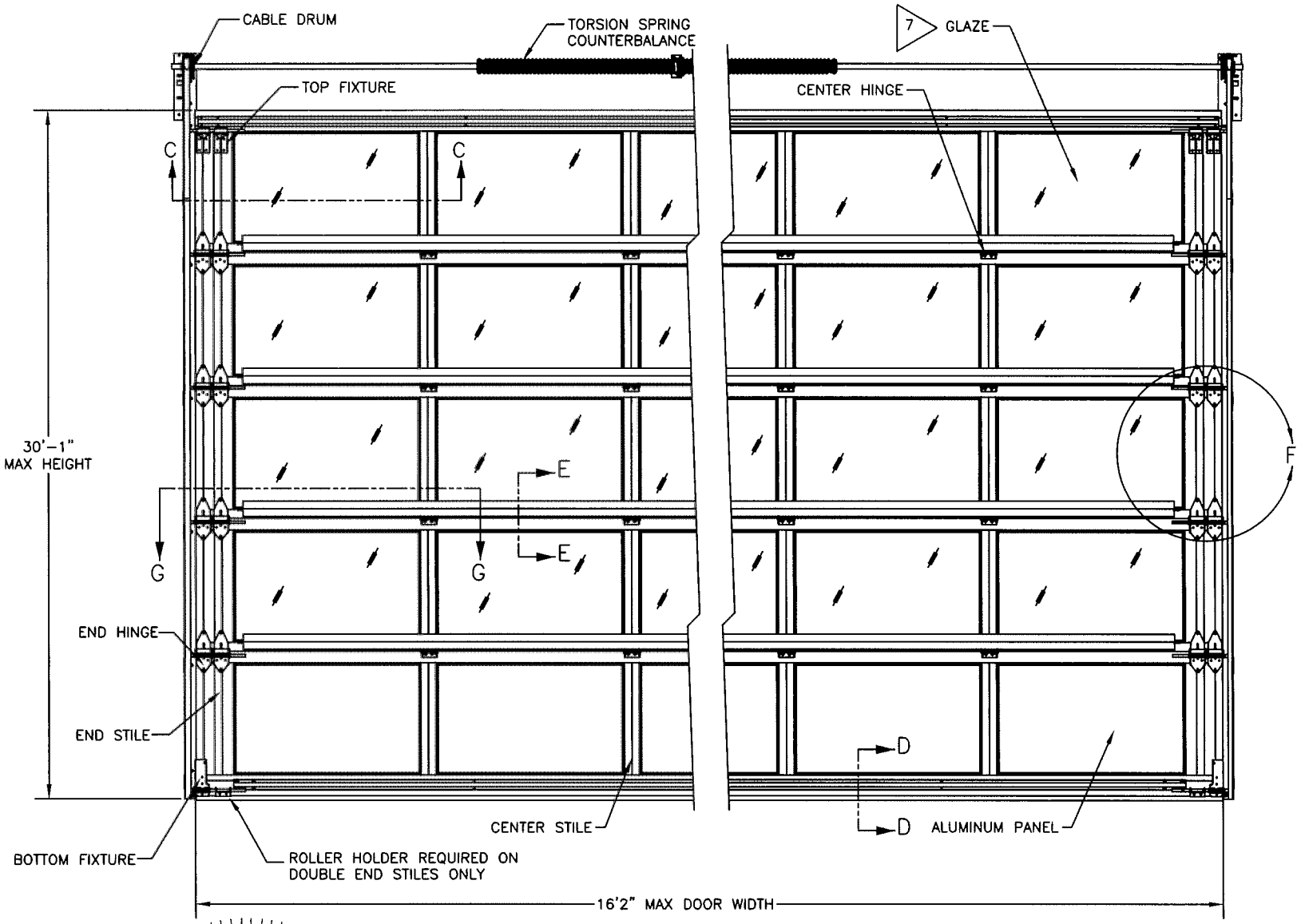

INTERIOR DOOR ELEVATION

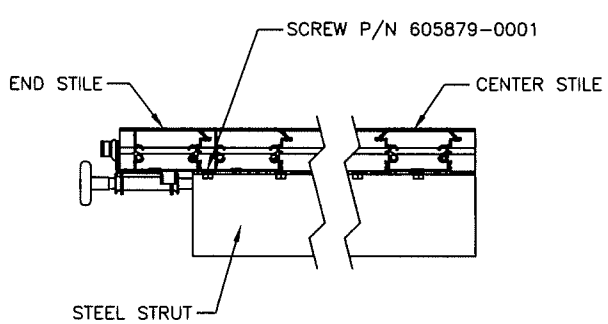

8A SECTION C-C

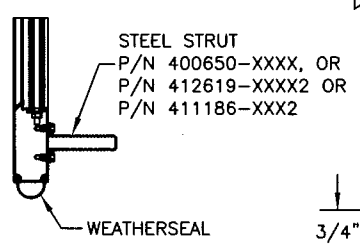

SECTION D-D
STEEL STRUT

STRUT	THICK	HEIGHT
HS-0	0.020	2.25
HS-1	0.030	2.25
HS-2	0.052	2.25
HS-3	0.055	3.50
2" 20GA	0.034	2.00
3" 20GA	0.034	3.00

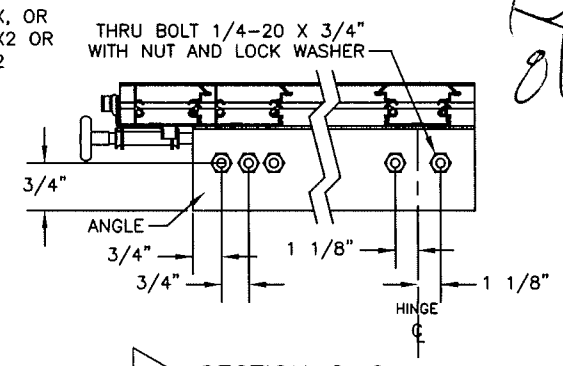

8B SECTION G-G

GORDON D. THOMAS
LICENSE
No. 46718
STATE OF FLORIDA
PROFESSIONAL ENGINEER
GORDON THOMAS
FL PE 46718

9/10/20

SERIES 521, 9920: 31/-31 PSF WINDLOAD

DOOR WIDTH UP TO	END STILE QTY	CENTER STILE QTY	ANGLE/SECT QTY	ANGLE/SECT TYPE	STRUT AT TOP & BOTTOM	ROLLER TYPE	ROLLER TIRE DIA.	ROLLER STEM DIA.	TRACK BRKT/FSTNR MAX SPACING	TRACK VERTICAL GAGE	JAMB LOAD LB/FT (HEIGHT)	HARDWAR
8'2"	SINGLE	2	0	FIN ONLY	HS-1	TR-3	2"	7/16"	24"	0.049"	127	STANDAR
10'2"	DOUBLE	2	0	FIN ONLY	HS-1	TR-3	2"	7/16"	12"	0.068"	158	STANDAR
12'2"	DOUBLE	3	1	1-3/4X2-7/8	HS-2	TR-3	2"	7/16"	12"	0.068"	189	STANDAR
14'2"	DOUBLE	4	1	1-3/4X2-7/8	HS-2	TR-5	2"	7/16"	12"	0.068"	220	STANDAR
16'2"	DOUBLE	5	2	1-3/4X2-7/8	HS-3	TR-5	2"	7/16" 1144	12"	0.068"	251	STANDAR

THE DRAWINGS AND ALL OTHER INFORMATION CONTAINED HEREIN ARE THE CONFIDENTIAL AND PROPRIETARY PROPERTY OF OVERHEAD DOOR CORPORATION AND ITS AFFILIATED COMPANIES. THIS DRAWING AND INFORMATION, IN WHOLE OR IN PART, MAY NOT BE COPIED IN ANY MANNER OR DISCLOSED TO ANYONE WITHOUT THE PRIOR WRITTEN CONSENT OF OVERHEAD DOOR CORPORATION. NO DISCLOSURE OF ANY OF THIS DRAWING OR INFORMATION IS INTENDED TO OPERATE AS A LICENSE OR AUTHORIZATION TO USE IT FOR ANY PURPOSE WITHOUT THE SPECIFIC WRITTEN CONSENT OF OVERHEAD DOOR CORPORATIC

REF DWG	USED ON

THIRD ANGLE PROJECTION

ASME Y14.100 AND Y14.5 APPLY, UNLESS OTHERWISE SPECIFIED DIMENSIONS ARE IN U.S. CUSTOMARY UNITS.

TOLERANCES UNLESS OTHERWISE SPECIFIED

WHOLE NUMBERS:	± .25
.X	± .1
.XX	± .03
.XXX	± .010
ANGLES:	± .5°
HOLES:	±

FINISH: N/A

UNIT OF MEASURE: EA

OVERHEAD DOOR — DALLAS, TEXAS

MATERIAL: N/A

	NAME	DATE
DRAWN BY:	T CLARK	10/2/20
CHECKED BY:	D KORNISH	10/2/20
APPROVED BY:	L KRUPKE	10/6/20

DRAWING TITLE: WINDLOAD, 521, 9920 31/-31 PSF, 16'-2" MAX

DRAWING NUMBER: D-410225

SCALE: N/A

SHEET 1 OF 1

REVISIONS				
EN	REV	DESCRIPTION	DATE	APPRO
32177	E	REVISED PER PCR	10/21/19	JQ
32499	F	DRAWING UPDATES	10/2/20	TC
32933	G	ADDED 2" 20GA STRUTS	05/05/25	M.DAI

NOTES

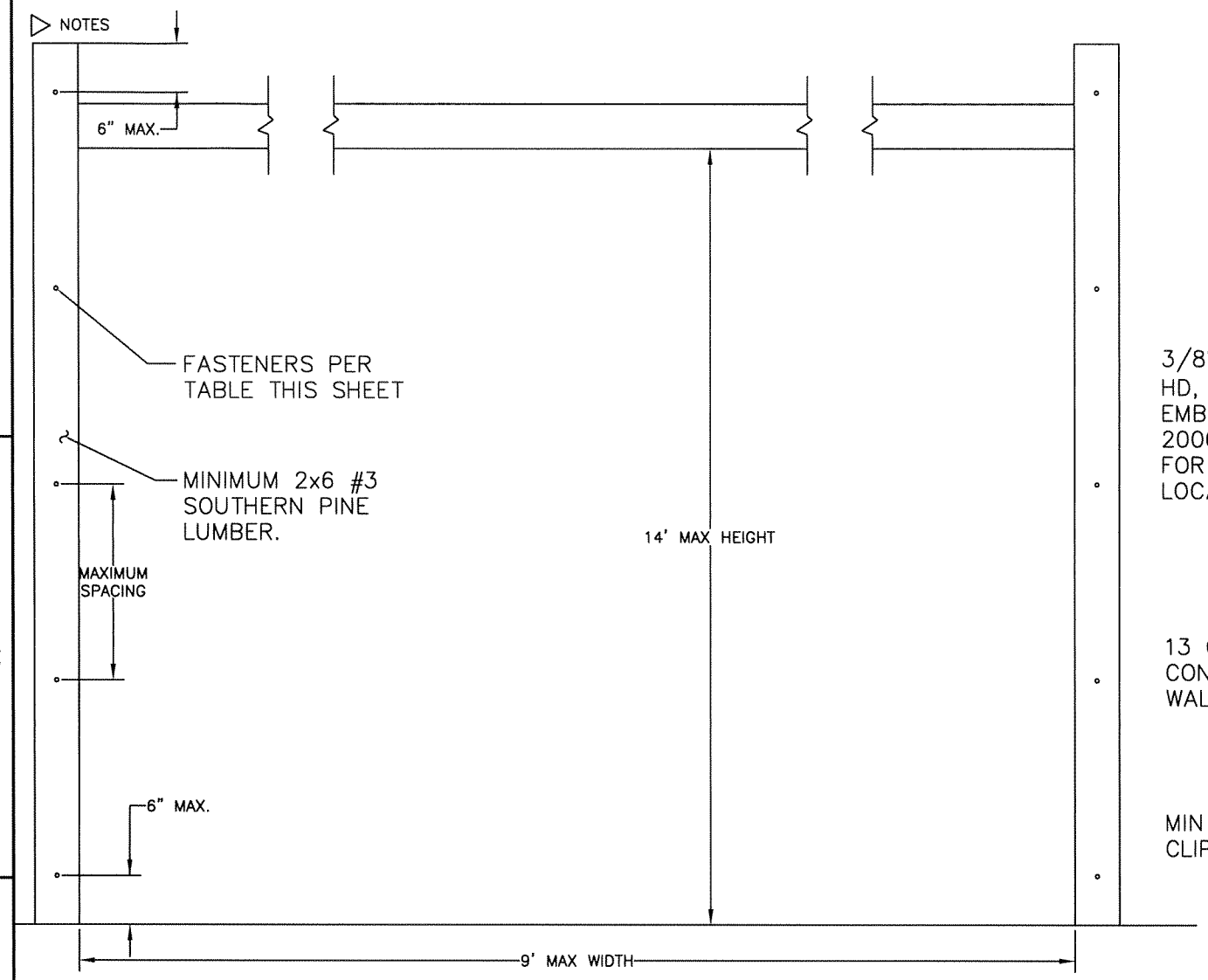

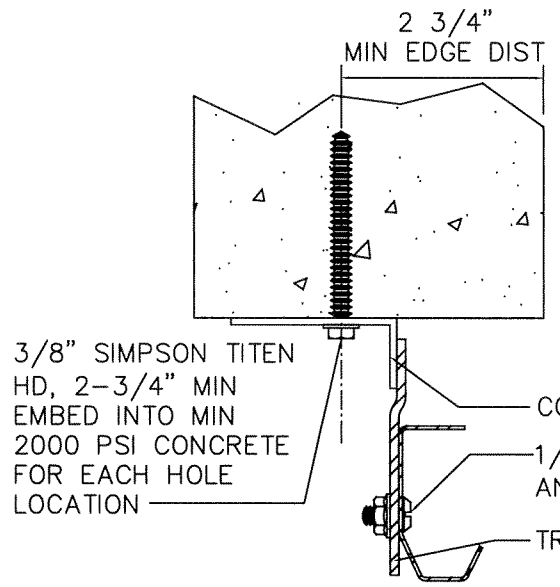

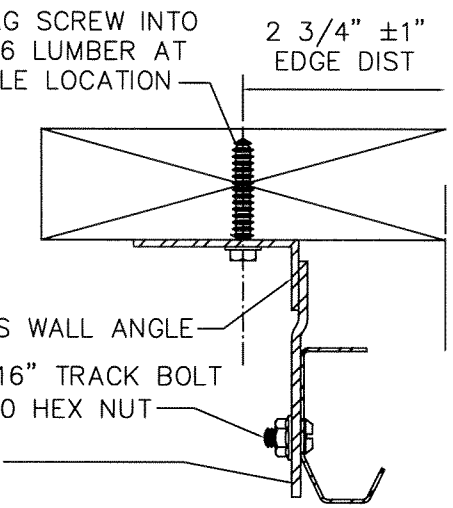

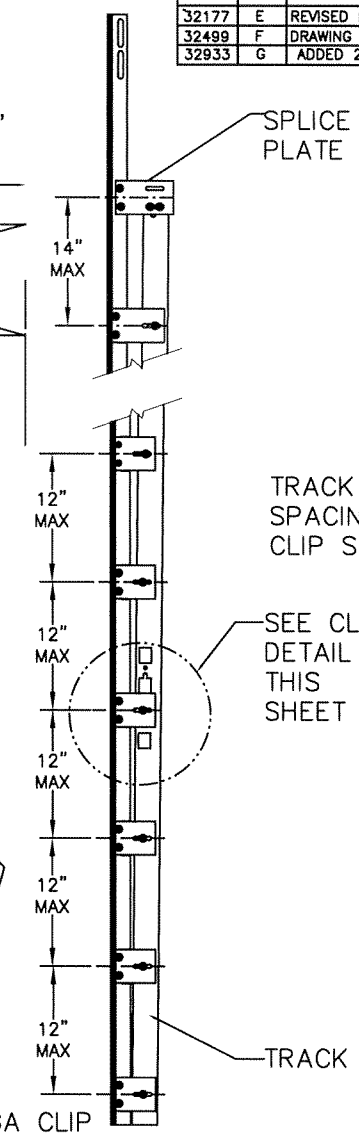

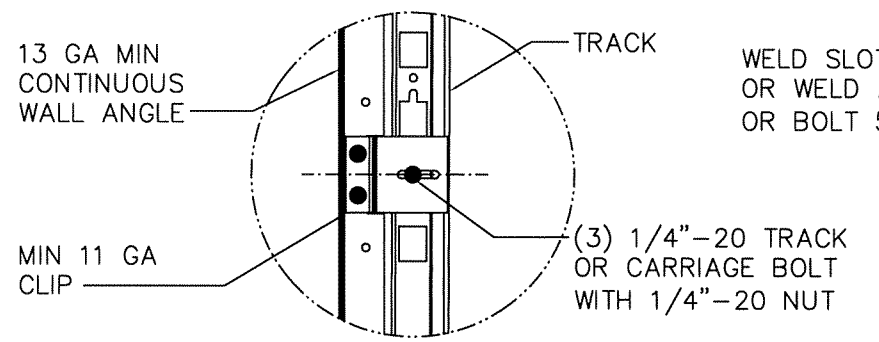

TYPICAL CLIP BOLTING DETAIL

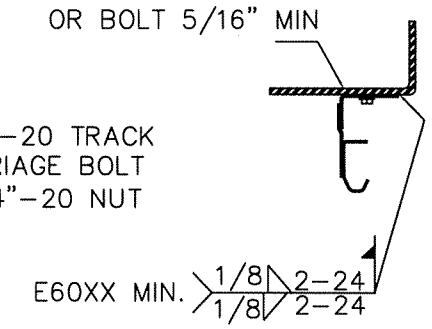

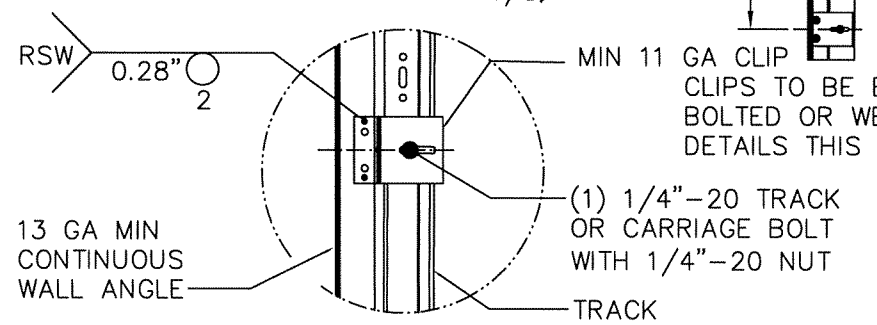

TYPICAL CLIP WELDING DETAIL

1. BASED ON 3/8" SIMPSON TITEN HEAVY DUTY SCREW ANCHOR WITH A 1" O.D. WASHER INTO CONCRETE WITH A MINIMUM EMBEDMENT DEPTH OF 2-3/4" AND A MINIMUM EDGE DISTANCE OF 2-3/4".
2. BASED ON 3/8" SIMPSON TITEN HEAVY DUTY SCREW ANCHOR WITH A 1" O.D. WASHER INTO GROUT FILLED CMU WITH A MINIMUM EMBEDMENT DEPTH OF 2-3/4", A MINIMUM EDGE DISTANCE OF 4", AND A MINIMUM END DISTANCE OF 4". CONCRETE MASONRY UNITS SHALL CONFORM TO ASTM C90 AND GROUT SHALL CONFORM TO ASTM C476.
3. BASED ON 3/8" DIAMETER x 3" LONG LAG SCREWS WITH 1" O.D. WASHERS WITH A 1-9/32" THREAD PENETRATION INTO SEASONED DRY WOOD SUPPORTING STRUCTURE.
4. PROVIDE QUANTITY OF SCREW ANCHORS OR LAG SCREWS AS REQUIRED TO MAINTAIN MAXIMUM SPACING AS SHOWN IN TABLE WITH A MINIMUM OF THREE (3) SCREW ANCHORS OR LAG SCREWS PER JAMB. SCREW ANCHORS OR LAG SCREWS AT TOP AND BOTTOM OF JAMB SHALL BE PLACED A MAXIMUM OF 6" FROM THE END OF THE JAMB.
5. LOAD PER JAMB CALCULATED TO BE A MAXIMUM OF +/-250.5 LBS PER FOOT.
6. CHART INCLUDES A SAFETY FACTOR OF 4.
7. DOOR JAMB TO BE MINIMUM 2x6 NO. 3 SOUTHERN PINE LUMBER (MIN) MOUNTED DIRECTLY TO SUPPORT STRUCTURE.
8. DESIGN OF THE SUPPORT STRUCTURE SHALL BE THE SOLE RESPONSIBILITY OF THE BUILDING DESIGNER AND SHALL BE DESIGNED FOR THE LOADS LISTED IN NOTE 5.
9. SCREW ANCHORS OR LAG SCREWS SHALL BE INSTALLED PER MANUFACTURER'S WRITTEN INSTRUCTIONS.

MAX SPACING OF ANCHORS/SCREWS PER JAMB (IN)		
3/8" SIMPSON TITEN HD SCREW ANCHOR TO MINIMUM 2000 PSI CONCRETE NOTE 1	3/8" SIMPSON TITEN HD SCREW ANCHOR TO MINIMUM 2000 PSI GROUT FILLED CMU NOTE 2	3/8" X 3" LONG LAG SCREW NOTE 3
24	18	24

GORDON D. THOMAS
LICENSE
No. 46718
STATE OF FLORIDA
PROFESSIONAL ENGINEER

8/18/25

GORDON THOMAS
FL PE 46718

THE DRAWINGS AND ALL OTHER INFORMATION CONTAINED HEREIN ARE THE CONFIDENTIAL AND PROPRIETARY PROPERTY OF OVERHEAD DOOR CORPORATION AND ITS AFFILIATED COMPANIES. THIS DRAWING AND INFORMATION, IN WHOLE OR IN PART, MAY NOT BE COPIED IN ANY MANNER OR DISCLOSED TO ANYONE WITHOUT THE PRIOR WRITTEN CONSENT OF OVERHEAD DOOR CORPORATION. NO DISCLOSURE OF ANY OF THIS DRAWING OR INFORMATION IS INTENDED TO OPERATE AS A LICENSE OR AUTHORIZATION TO USE IT FOR ANY PURPOSE WITHOUT THE SPECIFIC WRITTEN CONSENT OF OVERHEAD DOOR CORPORATIC

REF DWG	USED ON

THIRD ANGLE PROJECTION

ASME Y14.100 AND Y14.5 APPLY, UNLESS OTHERWISE SPECIFIED DIMENSIONS ARE IN U.S. CUSTOMARY UNITS.

TOLERANCES UNLESS OTHERWISE SPECIFIED	
WHOLE NUMBERS:	± .25
.X	± .1
.XX	± .03
.XXX	± .010
ANGLES:	± .5°
HOLES:	±

FINISH: N/A

UNIT OF MEASURE: EA

OVERHEAD DOOR — DALLAS, TEXAS

MATERIAL: N/A

	NAME	DATE
DRAWN BY:	T CLARK	10/2/20
CHECKED BY:	D KORNISH	10/2/20
APPROVED BY:	L KRUPKE	10/6/20

DRAWING TITLE: WINDLOAD, 521, 9920 31/-31 PSF, 16'-2" MAX

DRAWING NUMBER: D-410225

SCALE: N/A

SHEET 2 OF 3